HEATED AQUATIC MICROCOSMS FOR CLIMATE CHANGE EXPERIMENTS

DERMOT McKEE*, DAVID ATKINSON, SALLY COLLINGS, JOHN EATON, IAN HARVEY, KEITH HATTON, TOM HEYES, DAVE WILSON, LEANDER WOLSTENHOLME AND BRIAN MOSS

(School of Biological Sciences, The University of Liverpool, Liverpool L69 3BX, England.)
[Correspondence and E-mail: dmckee@liv.ac.uk]*

Introduction

We are experiencing global climate change (e.g. Houghton et al. 1996; Huang et al. 2000). One of the main features of this change is a significant and continuing rise in temperature, attributable at least in part to anthropogenic enhancement of the greenhouse effect (Kerr 2000). The projected magnitude and rapidity of this phenomenon is cause for major concern about how the biosphere will respond.

Ponds and shallow lakes are likely to be strongly affected by climate change, and by increase in environmental temperature in particular. Hydrological regimes and nutrient cycling may be altered, plant and animal communities may undergo changes in both composition and dynamics, and long-term and difficult to reverse switches between alternative stable equilibria may occur (Scheffer et al. 1993; Schindler 1997). A thorough understanding of the potential effects of increased temperature on ponds and shallow lakes is desirable because these ecosystems are of immense importance throughout the world as sources of drinking water, and for their amenity and conservation value. This understanding can only come through experimental studies in which the effects of different temperature regimes are compared. In turn, this requires waterbody heating systems capable of accurate and dependable control over long periods.

We report here design details and operating characteristics of a recently constructed experimental facility consisting of 48 aquatic microcosms which mimic the pond and shallow lake environment. Thirty-two of the microcosms can be heated and regulated to simulate climate change scenarios, including those predicted for the UK (Conway 1998). We also summarise the current and future experimental uses of the microcosms.

Microcosm design

The microcosms are cylindrical fibre-glass tanks 1.02 m deep and 2 in diameter, with a capacity of 3200 litres (Fig. 1). Each microcosm is sunk into the ground, for insulation, to a depth of c. 70 cm on a gently south-west



FIG. 1. Microcosms at Ness Botanic Gardens near Liverpool, photographed in the spring of 1999. The lower picture shows a heated microcosm, containing introduced macropytes: *Elodea nuttallii*, *Potamogeton natans* and *Lagarosiphon major*.

sloping site at Ness Botanic Gardens near Liverpool, UK (53° 16' N, 3° 02' W). A 10 cm outwardly overhanging rim with 30 cm ground clearance helps to prevent the microcosms from acting as large pit-fall traps, and dissuades the entry of amphibians. A heating element, lying horizontally on top of a 5 cm sediment layer (7:1, sand:loam), is positioned in the bottom of each microcosm. Thirty-two of the microcosms can be heated. Whether a particular microcosm received a functional heating element or a dummy element not connected to the heating system was decided by using a random block design (site lay-out, Fig. 2a). Within each block the nearest unheated microcosm to a particular heated microcosm acts as an ambient temperature reference for that heated microcosm. Using these references, the heated microcosms are maintained at the required number of degrees above ambient.

The heating system is essentially similar to a large domestic central heating system, with elements in each microcosm being analogous to thermostat-controlled radiators in the individual rooms of a house. Thus, situated in a control centre at the top of the experimental site, a 3700 litre boiler containing three 15 kW immersion heaters, maintains a reservoir of hot water. This hot water is pumped around the site (Grandfos UPSD 40-60 twin pump) through a network of highly insulated underground pipes, flows through the microcosm heating elements, and then is taken back to the boiler. The heating elements in the microcosms use high quality plastic components designed to resist corrosion and achieve a uniform pattern of heat distribution throughout the water column (Fig. 2b). Each functional element is plumbed into the pipe network via control valves housed inside boxes mounted on the rims of the microcosms (Fig. 2b).

Heating control operates through three sets of inter-linked components: temperature sensors (Titan Products type 10K3A1 thermistors), data-processors (TREND IQ222), and control valves. Temperature sensors are positioned at a central depth in each microcosm. Information from the sensors feeds continuously to the data-processors which then adjust the flow-rate of hot water through the heating elements via control valves. The system works at a gross sensitivity of ±0.25°C. Therefore, if the temperature in a heated microcosm overshoots its set-point (above ambient) by 0.25°C, the control valves fully close, and flow of hot water through the heating element stops. Conversely, the control valves are fully open, and hot water flow-rate is maximised, if temperature falls by 0.25°C below the set-point. A PC connected to the data-processors allows control over system temperature settings using the software package Doorway (Chamier & Chamier 1993-98), visual representation of actual microcosm temperatures, and permanent storage of data. A number of points in the pipe-work allow for both processor-controlled and manual diversion and recirculation of hot water (see valve lay-out in Fig. 2). All wiring is insulated and buried underground, following the route of the pipe-work.

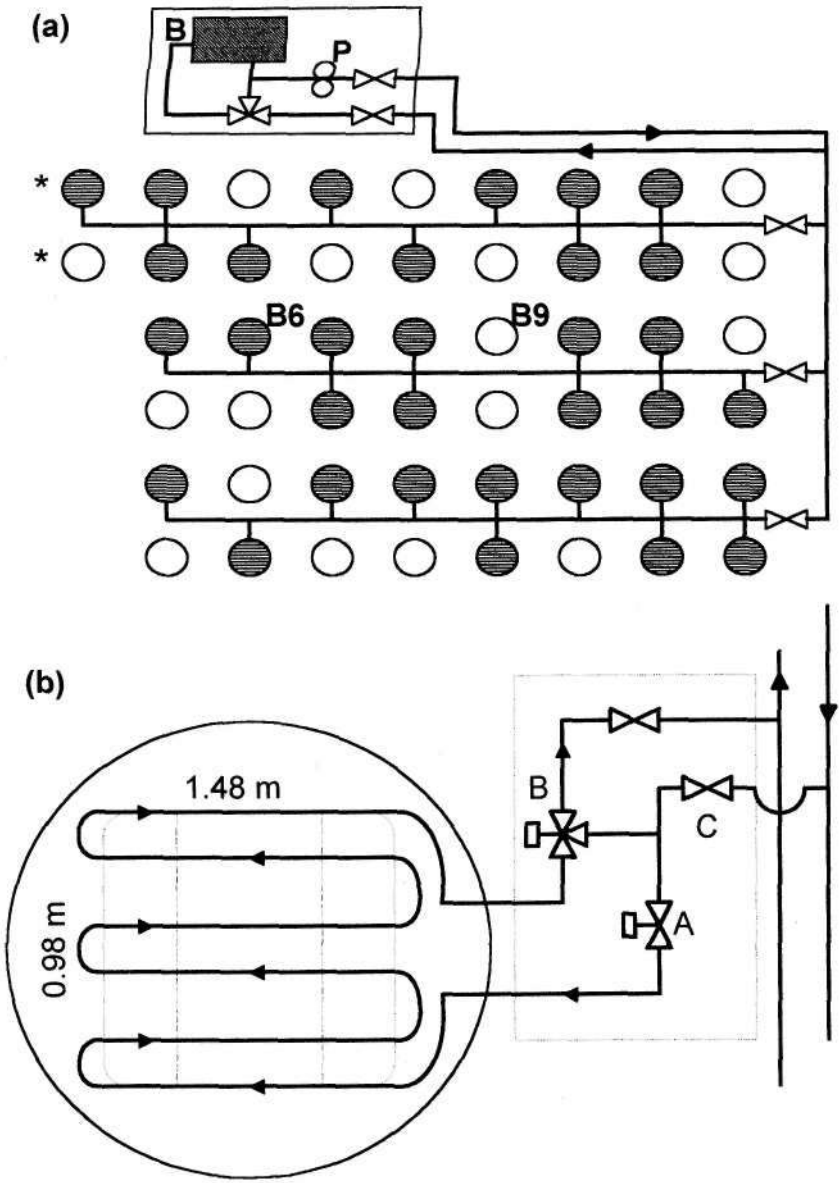
(a)
B
P
*
*
B6
B9
(b)
1.48 m
0.98 m
B
C
A

FIG. 2 *(on facing page).* Diagrams illustrating the general arrangement of microcosms and heating elements, (a). Site lay-out of heated (open circles) and unheated (shaded circles) microcosms (not drawn to scale). Two de-ionised water storage tanks are indicated by asterisks. Pipe-work is insulated, and buried, plastic Instaflex (63 mm diameter leaving and entering the control centre; 32 mm running between microcosms). A boiler (B), pump (P), data processors and a PC are housed in the control centre. The one-way valves are manually operated isolation valves, (b). Heating element and associated control valves (not drawn to scale). Elements are constructed from 20 mm Instaflex pipe held in position on a weighted rectangular frame (sand-filled 35 mm drain-pipe) by nylon tie-wraps and two Multibeton clip-rail supporting struts. Valves are housed within an insulated plastic box mounted on the rim of the microcosm. Valves A and B are adjustable valves with thermal drives connected to data processors. Flow volume was initially set to 1.5 litres per minute by manual adjustment of the inflow valve C.

Operating characteristics

Information on the operating characteristics of the system was gathered over a 20-month period from October 1998 to June 2000. During this time, sixteen of the microcosms were heated continuously to 3°C above ambient, sixteen were heated to 3°C above ambient during the summer only (April to September), and the remaining sixteen were unheated. The boiler maintained its reservoir at 70 to 75°C, with water leaving the control centre at a mean temperature of 49.5°C (Standard Deviation = 2.0) and returning at a mean of 46.1 C (SD = 1.9). Maximum and minimum system flow temperature settings were 65°C and 45 °C respectively.

Temperature control in the heated microcosms was consistent and reliable. Fig. 3 (upper part) shows how mean daily temperatures in heated microcosms closely tracked those of the unheated microcosms, reaching a maximum of 26.8°C (July 1999) and a minimum of 5.5°C (December 1999). Greater illustration of the sensitivity of temperature control is given in Fig. 3 (lower part). Here, a temperature record is shown for a randomly selected individual heated microcosm (B6 with its ambient reference B9, Fig. la). The temperature in the heated microcosm deviated from the set-point of 3°C above ambient within the margins +0.97°C to -0.63°C (mean = 0.04, SD = 0.14). Additionally, three independent data-loggers recording hourly temperatures at depths of 25 cm, 50 cm and 75 cm in the microcosm indicated that major heating-induced-stratification did not occur. The maximum temperature difference at any time between the loggers was 0.6°C (mean = 0.2, SD = 0.1). Further, a logger placed directly on the upper surface of the heating element at the bottom of the microcosm indicated that temperature here was, on average, only 0.4°C higher (SD = 0.5) than at a mid-depth in the water column, as recorded by the microcosm's own sensor. This example reflects the typical situation across all the heated microcosms.

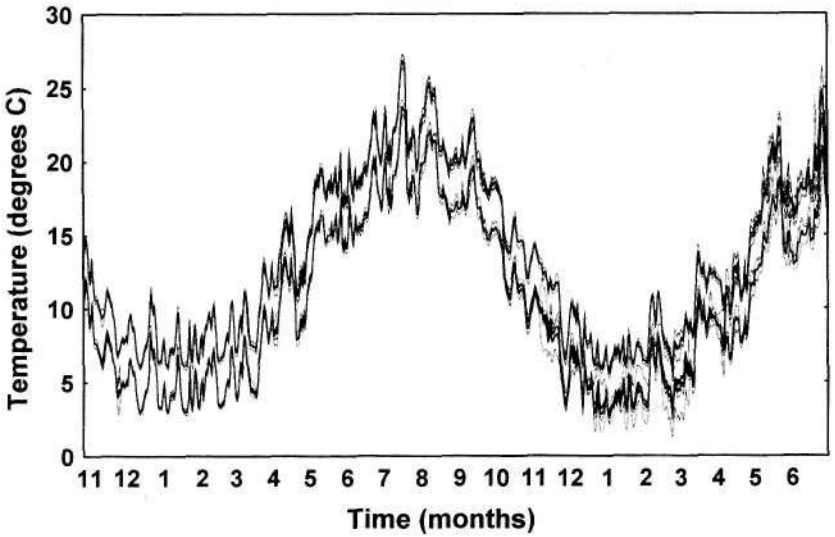
Temperature (degrees C)
30
25
20
15
10
5
0
11 12 1 2 3 4 5 6 7 8 9 10 11 12 1 2 3 4 5 6
Time (months)

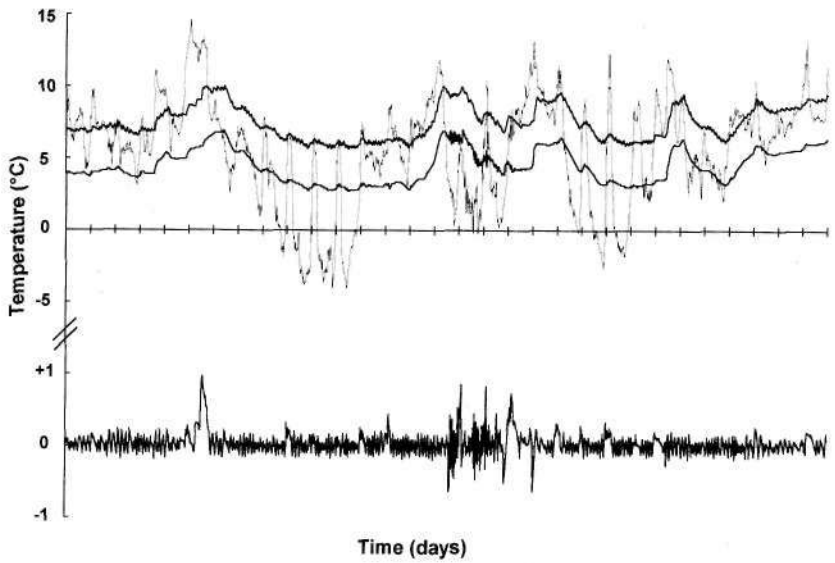
Temperature (°C)
15
10
5
0
-5
+1
0
-1
Time (days)

FIG. 3 *(on facing page). Above:* Mean daily temperature trajectories (°C), bounded by standard deviations (fine lines), of heated versus unheated microcosms. The record begins on 22 October 1998 and ends on 23 June 2000. *Below:* Temperature (°C, recorded every 15 minutes in January 1999) of an individual heated microcosm (upper solid line) and its ambient reference (lower solid line). Air temperature is also plotted (fine dotted line). The bottom panel shows the deviation of the heated microcosm from the set-point of 3°C above ambient.

Water loss from the microcosms due to evaporation was weather dependent and greatest under heating during the summer. De-ionised water produced on-site was used to top-up the microcosms if volume fell below a pre-set level. Annual electricity consumption was approximately 104,000 kWh, translating into 11.8 kWh per heated microcosm each day.

Biological communities and hypothesis testing

Representative temperate aquatic communities are readily established in the microcosms. During the spring of 1998 each microcosm was filled with bore-hole water, planted with 400 g wet-weight each of the macrophytes *Elodea nuttallii, Potamogeton nutans,* and *Lagarosiphon major,* and inoculated with plankton. Macroinvertebrates rapidly colonised the microcosms of their own accord, or arrived incidentally with the plants. Subsequently, over 200 species of protists, phytoplankters, zooplankters and macroinvertebrates have been recorded;

Concurrent with heating, the microcosms also have been subjected to factorial combinations of a nutrient-enrichment treatment (addition or not of sodium salts to give instantaneous concentrations of 0.5 mg nitrogen per litre and 0.05 mg phosphorus per litre during winter, and 0.17 mg nitrogen per litre and 0.017 mg phosphorus per litre during summer), and a fish treatment (presence or absence of populations of three-spined stickleback *Gasterosteus aculeatus).* By closely monitoring physical and biological variables in the microcosms, fundamental questions concerning the structure and functioning of pond and shallow lake ecosystems therefore can be addressed. Specifically, by careful comparison of organism abundance and diversity, current interest focuses on the processes involved in promoting switches between the alternative stable states of macrophyte-dominated clear water and phytoplankton-dominated turbid water, and how these processes may be influenced by climate change. Future work intends to complement this approach by examining carbon flow through the communities with emphasis on microbial pathways. Ultimately, the facility should prove an invaluable tool in building a picture of the likely consequences of raised environmental temperatures caused by climate change for ponds and shallow lakes, and help

in developing any necessary action plans for the preservation of these important habitats.

Acknowledgements

Parkside Engineering, JBC Control Systems Ltd, and the University of Liverpool Building Services Department provided design and installation expertise. We thank everyone involved. This project was supported by NERC grant GR3/11438.

References

Chamier, A. D. & Chamier, J. D. (1993-98). Doorway, supervisory software for building management systems. Doorway Systems, Crawley, West Sussex, UK.

Conway, D. (1998). Recent climate variability and future climate change scenarios for Great Britain. *Progress in Physical Geography* **22,** 350-374.

Houghton, I. T., Meira Filho, L. G., Callander, B. A., Harris, N. & Maskell, K. (1996). *Climate change 1995: the science of climate change.* Cambridge University Press, Cambridge.

Huang, S., Pollack, H. N. & Shen, P-Y. (2000). Temperature trends over the past five centuries reconstructed from borehole temperatures. *Nature, London* **403,** 756-758.

Kerr, R. A. (2000). Draft report affirms human influence. *Science* **288,** 589-590.

Scheffer, M., Hosper, S. H., Meijer, M-L., Moss, B. & Jeppesen, E. (1993). Alternative equilibria in shallow lakes. *Trends in Ecology and Evolution* 8, 275-279.

Schindler, D. W. (1997). Widespread effects of climate warming on freshwater ecosystems in North America. *Hydrological Processes* 11, 1043-1067.